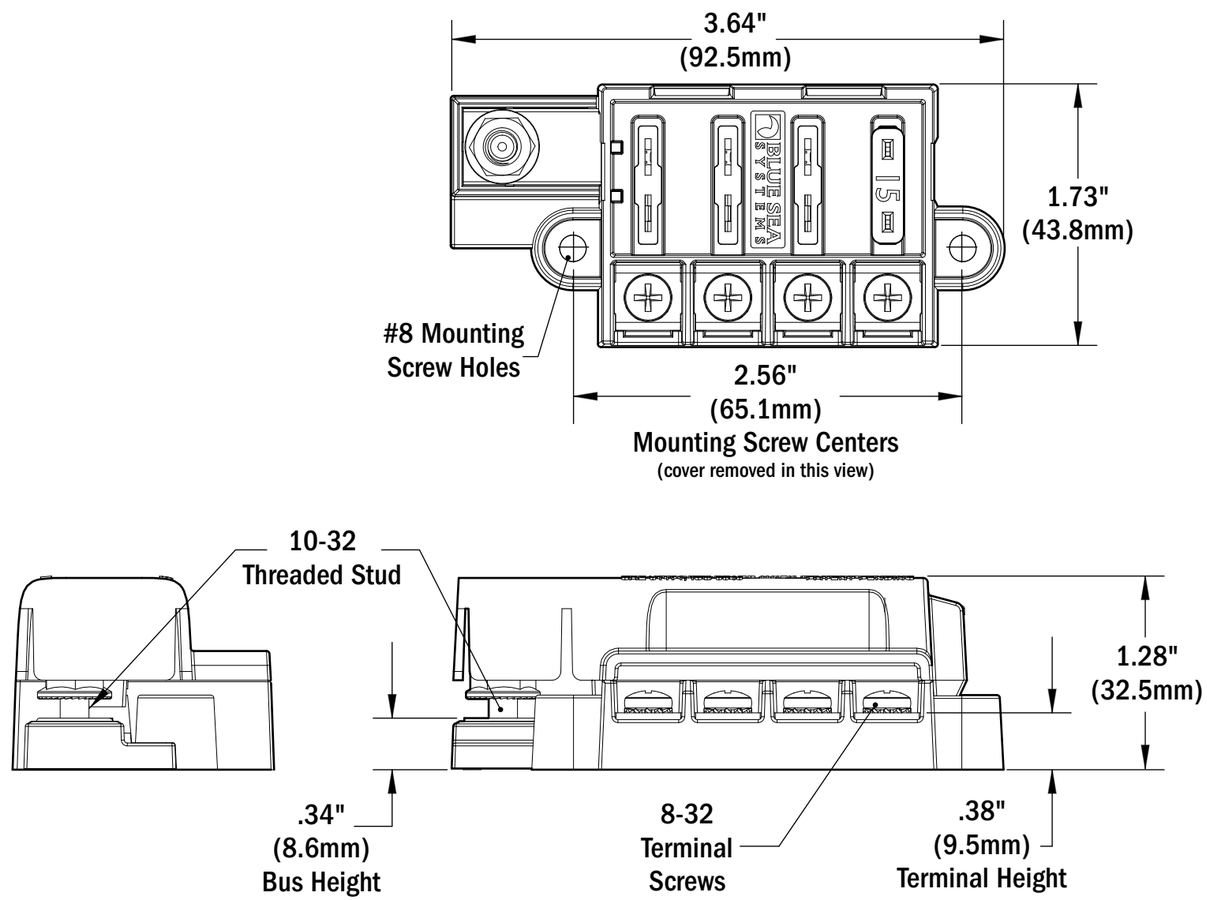
3.64"
(92.5mm)
1.73"
(43.8mm)
BLUE SEA SYSTEMS
15
#8 Mounting
Screw Holes
2.56"
(65.1mm)
Mounting Screw Centers
(cover removed in this view)
10-32
Threaded Stud
1.28"
(32.5mm)
.34"
(8.6mm)
Bus Height
8-32
Terminal
Screws
.38"
(9.5mm)
Terminal Height