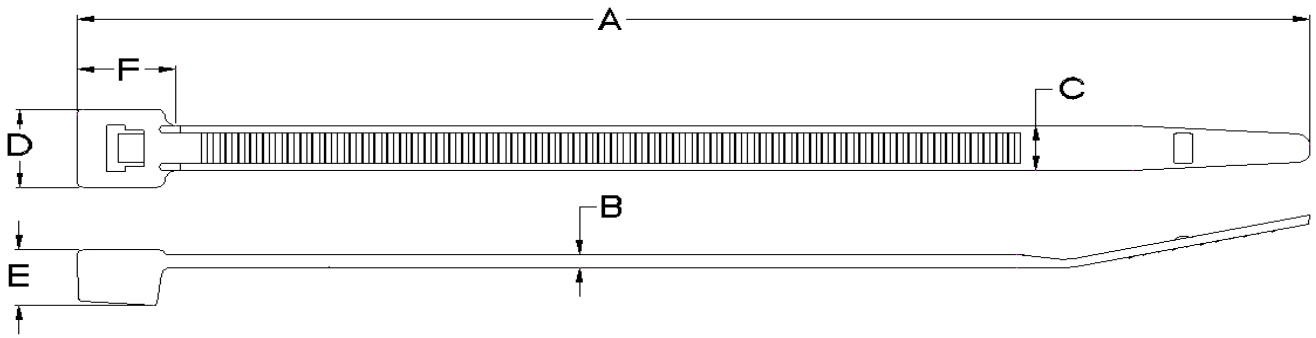

WAYTEK PART NUMBER	BUNDLE DIAMETER		A IN (mm) +/- .125 (3.175mm)	B IN (mm) +/- .005 (.127mm)	C IN (mm) +/- .005 (.127mm)	D IN (mm) +/- .020 (.508mm)	E IN (mm) +/- .020 (.508mm)	F IN (mm) +/- .030 (.762mm)	MIN LOOP TENSILE LBS (n)	ANSI/UL 94 Mtl FLAMABILITY RATING	PLENUM RATING
	MIN IN (mm)	MAX IN (mm)									
21041C, 21041M, UV BLACK	.062 (1.57mm)	.874 (22.2mm)	4.125 (104.775mm)	.042 (1.066mm)	.095 (2.413mm)	.180 (4.572mm)	.150 (3.810mm)	.220 (5.588mm)	18 (80)	V-2	AH-2
21021C, 21021M, NATURAL	.062 (1.57mm)	.874 (22.2mm)	4.125 (104.775mm)	.042 (1.066mm)	.095 (2.413mm)	.180 (4.572mm)	.150 (3.810mm)	.220 (5.588mm)	18 (80)	V-2	AH-2
21042C, 21042M, UV BLACK	.062 (1.57mm)	1.500 (38.1mm)	6.187 (157.149mm)	.042 (1.066mm)	.095 (2.413mm)	.180 (4.572mm)	.150 (3.810mm)	.220 (5.588mm)	18 (80)	V-2	AH-2
21022C, 21022M, NATURAL	.062 (1.57mm)	1.500 (38.1mm)	6.187 (157.149mm)	.042 (1.066mm)	.095 (2.413mm)	.180 (4.572mm)	.150 (3.810mm)	.220 (5.588mm)	18 (80)	V-2	AH-2
21019C, 21019M, UV BLACK	.062 (1.57mm)	2.187 (55.5mm)	8.187 (207.949mm)	.042 (1.066mm)	.095 (2.413mm)	.180 (4.572mm)	.150 (3.810mm)	.220 (5.588mm)	18 (80)	V-2	AH-2
21018C, 21018M, NATURAL	.062 (1.57mm)	2.187 (55.5mm)	8.187 (207.949mm)	.042 (1.066mm)	.095 (2.413mm)	.180 (4.572mm)	.150 (3.810mm)	.220 (5.588mm)	18 (80)	V-2	AH-2

REV	DATE	BY	CHK	APPROVE	DESCRIPTION
A	12/22/14	JA	KT	KT	INTITIAL RELEASE

WAYTEK

WAYTEK – 18 LB. (80n) MINIATURE CABLE TIES

MATERIAL:

NYLON 6/6 POLYAMIDE

SHEET 1 OF 1	**REV.: A**	DRAWING NO.: 18-A	
DRAWN BY	DATE	CHECK	SCALE
JA	12/22/14	KT	NONE

CONFIDENTIAL PROPERTY OF WAYTEK
THIS DRAWING IS PROVIDED ON A RESTRICTED BASIS AND IS NOT TO BE USED IN ANY WAY DETRIMENTAL TO THE INTERESTS OF WAYTEK